PowerPhysics
The future of audio amplifiers

Speaker Output J3

Pin 1: Ground
Pin 2: Output A
Pin 3: Ground
Pin 4: Output B

Power J1

Pin 1: 40 Vdc
Pin 2: -28 Vdc
Pin 3: -40 Vdc
Pin 4: Power Ground
Pin 5: Power Ground
Pin 6: +15 Vdc
Pin 7: -15 Vdc
Pin 8: Analog Ground

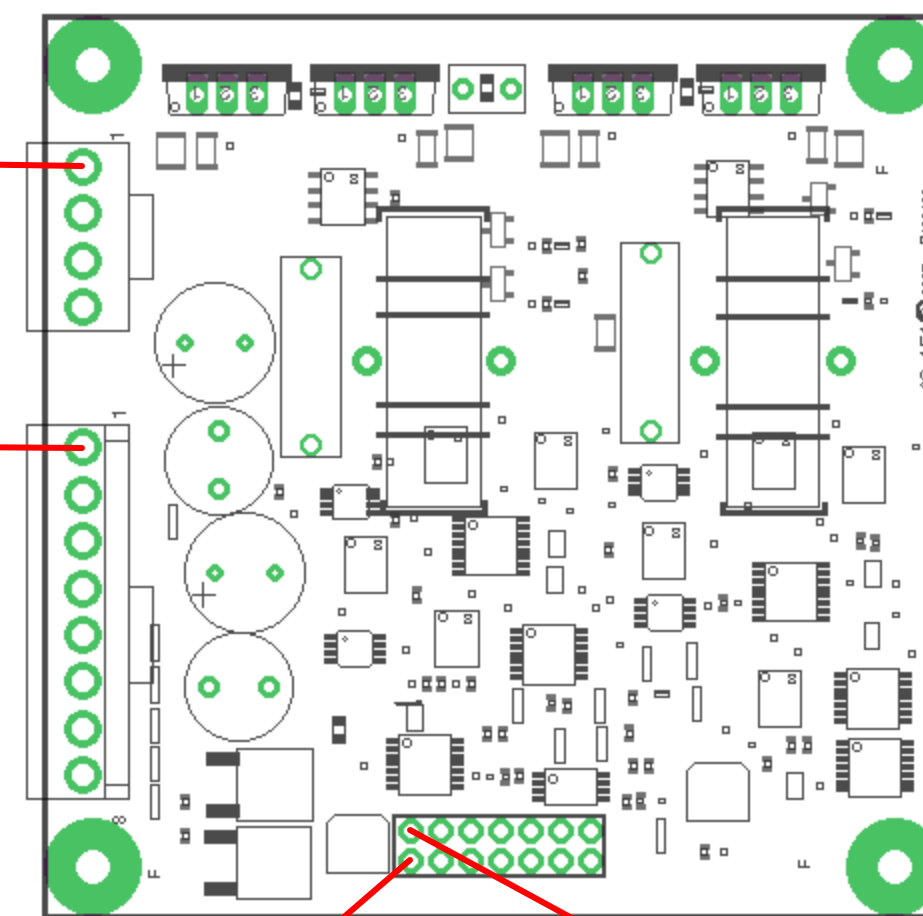

Audio Interface J2

Pin 1: Ground
Pin 2: Audio A
Pin 3: Audio B
Pin 4: Ground
Pin 5: +15 Vdc Output
Pin 6: -15 Vdc Output
Pin 7: Ground
Pin 8: Current Monitor A
Pin 9: Current Monitor B
Pin 10: Status
Pin 11: Disable
Pin 12: Temperature Monitor
Pin 13: Sync
Pin 14: Ground